TABLE		
KEYING (DIM "A")	PART NO.	
	Ag PLATED(HOUSING)	Au PLATED(HOUSING)
0°	B100114694921	B10114694921G
45°	B100114694922	B10114694922G
90°	B100114694923	B10114694923G
270°	B100114694927	B10114694927G
315°	B100114694928	B10114694928G
W/O KEYING	B100114694929	B10114694929G

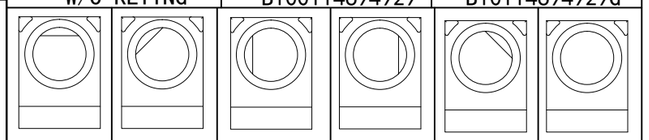

0°	45°	90°	270°	315°	W/O KEYING

NOTE:

1. MATERIAL:HOUSING:ZINC ALLOY DIE CASTING
   CONTACT:BeCu
2. FINISH:HOUSING:Au OR Ag OVER NIKEL.
   CONTACT:Au OVER NIKEL.
3. THIS PART MEETS THE RESTRICTION OF HAZARDOUS SUBSTANCES IN ELECTRICAL AND ELECTRONIC EQUIPMENT (RoHS) DIRECTIVE (2011/65/EU)
4. (B) MATING FORCE:≤12N[43.2 ozf] MAXIMUM PER CONTACT.AVERAGE FOR ENTIRE CONNECTOR
   UNMATING FORCE:≥0.5N [1.8 ozf] MINIMUM PER CONTACT.AVERAGE FOR ENTIRE CONNECTOR
   (TEST WITH A STANDARD PROBE DIAMETER OF 5.45MM)

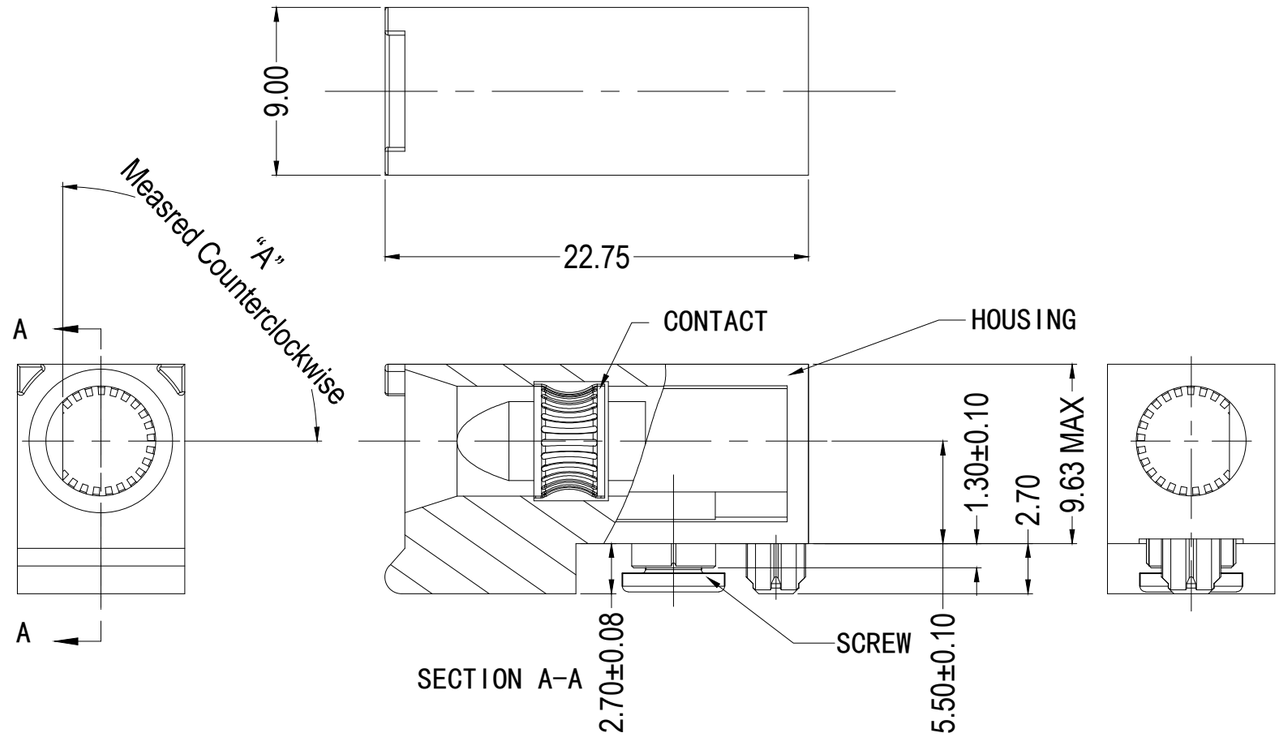

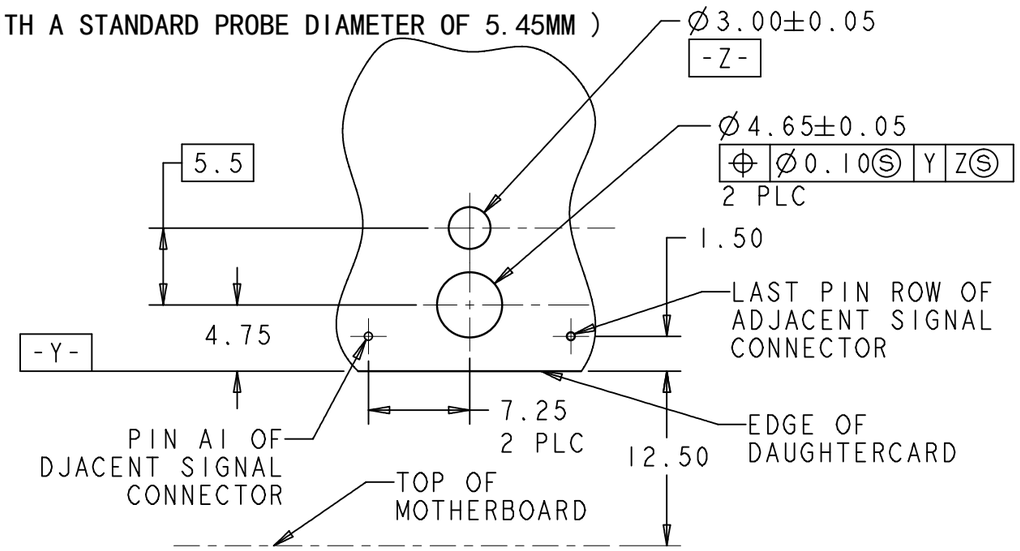

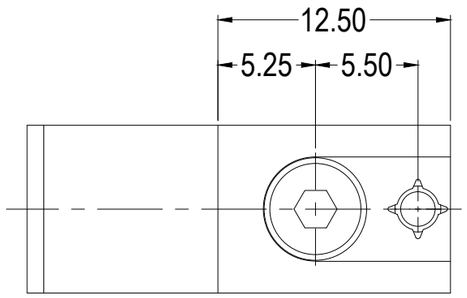

PRIMARY PCB LAYOUT
CONNECTOR SIDE
SCALE 3: 1

REV.	DESCRIPTION	DATE
B	PRD-1904002/UPDATED	04/15'19
A	PRD-1802005/UPDATED	02/28'18
X1	PRD-1705005/NEW RELEASED	05/17'17

GENERAL TOLERANCES (UNLESS SPECIFIED)	
.X ± 0.35	X.° ± 5°
.XX ± 0.13	.X° ± 2°
.XXX ± 0.10	.XX° ± 1°
ECN NO.	PRD-1904002
SIZE	UNIT
A3	mm

CONSHARE

PART NO.	SEE TABLE
APPROVED:	zlqian 04/15'19
CHECKED:	zqzeng 04/15'19
DRAWN:	jsxu 04/15'19
TITLE:	VPX GUIDE MODULE
DWG NO.	10-1050-038
	CUSTOMER DWG

SCALE	SHEET	REV.
1:1	1/1	B